THIS DRAWING IS UNPUBLISHED. RELEASED FOR PUBLICATION .19 .
© COPYRIGHT 19 BY AMP INCORPORATED. ALL RIGHTS RESERVED.

LOC	DIST
AF	50

REVISIONS

P	LTR	DESCRIPTION	DATE	DWN	APVD
	J	REV PER 0G3A-0253-01	10APR01	JR	DD

1 CONTINUOUS STRIP ON REELS.

2 FOREIGN PRODUCTION ONLY.

3 0.002032 [.000080] MIN TIN PLATE.

4 0.000381 [.000015] MIN GOLD PLATE OVER
0.000762 [.000030] MIN NICKEL UNDERPLATE.

5 0.003810 [.000150] MIN NICKEL PLATE.

6 WIRE BARREL TO ACCEPT #22-#18 AWG STRANDED LEAD WIRE.

7 INSULATION BARREL ACCEPTS 2.16-3.18 [.085-.125]
DIA INSULATION.

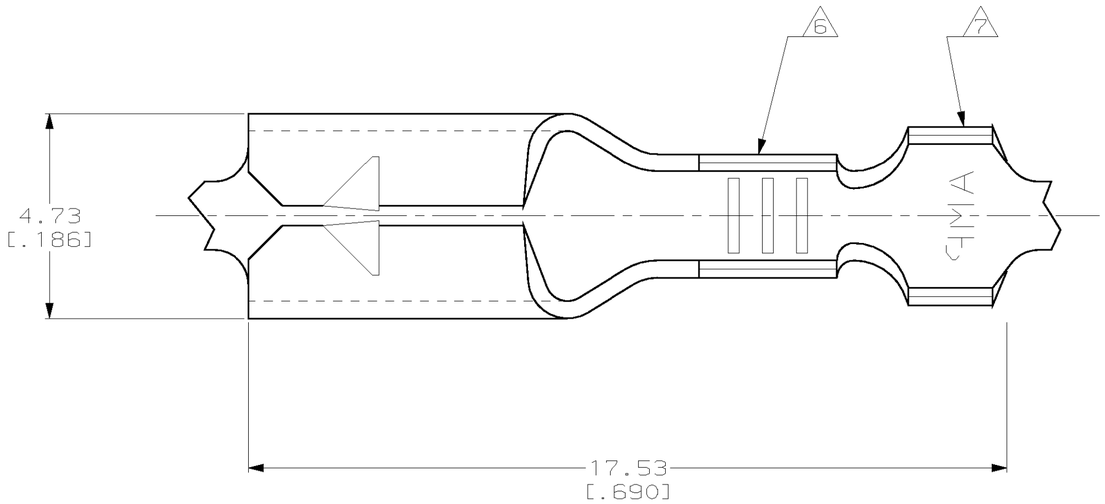

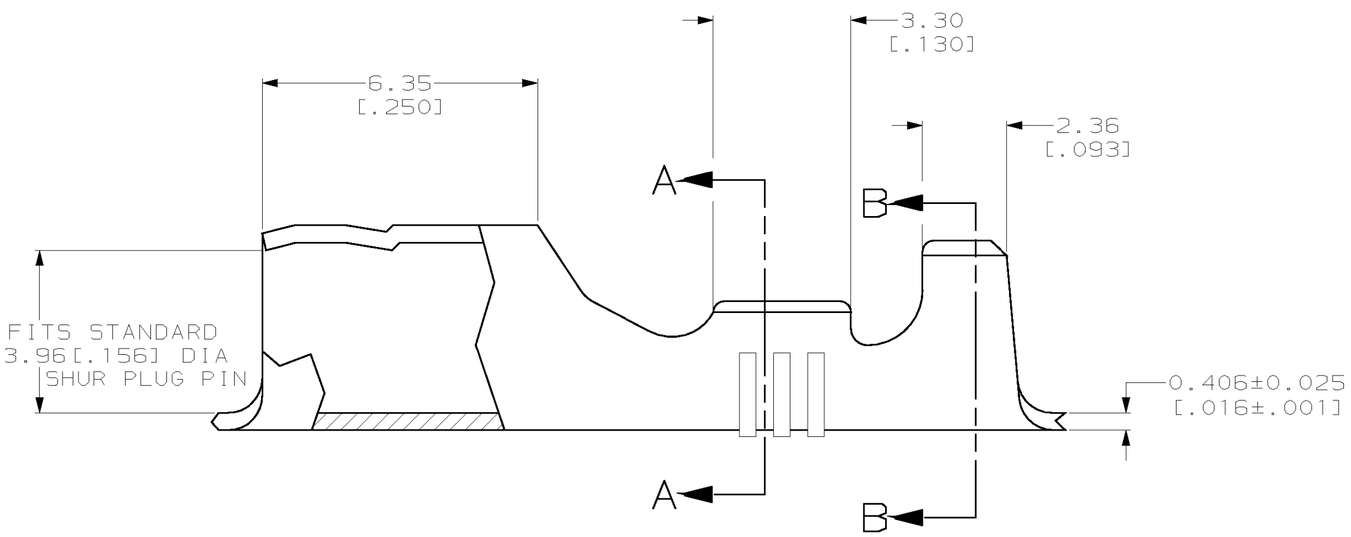

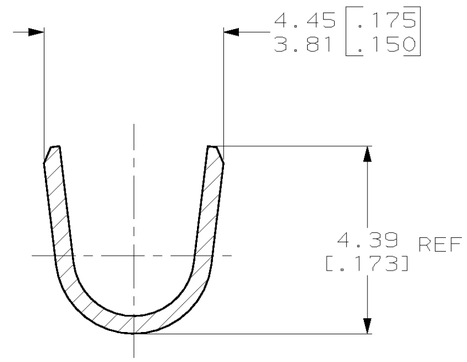

SECTION B–B

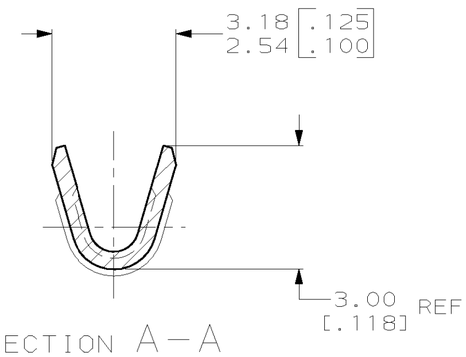

SECTION A–A

	FINISH	PART NUMBER
OBSOLETE	– 5	2 42581-4
OBSOLETE	4 –	42581-3
	– 3	42581-2
OBSOLETE	NONE	42581-1

THIS DRAWING IS A CONTROLLED DOCUMENT.

DIMENSIONS: mm [INCHES]

TOLERANCES UNLESS OTHERWISE SPECIFIED:
0 PLC ±-
1 PLC ±-
2 PLC ±0.25 [.010]
3 PLC ±-
4 PLC ±-
ANGLES ±-

MATERIAL 4M BRASS
FINISH SEE TABLE

DWN MICHAEL S. FEHER 21JUL1999
CHK DON DECKER 23JUL1999
APVD DON DECKER 23JUL1999
PRODUCT SPEC –
APPLICATION SPEC –
WEIGHT –

AMP Incorporated
Harrisburg, PA 17105-3608

NAME RECEPTACLE, SHUR PLUG, 3.96 [.156] DIA

SIZE A2 | CAGE CODE 00779 | DRAWING NO C- 42581 | RESTRICTED TO –

CUSTOMER DRAWING | SCALE 5:1 | SHEET 1 OF 1 | REV J

42581

AMP 1471-9 REV 11JUN97

20-JUL-99 16:59:23 amp02644 /home/amp02644/edmmod